REV	DESCRIPTION	DRAWN	DATE
		APPROVED	DATE
	E.R. NO. 9125		

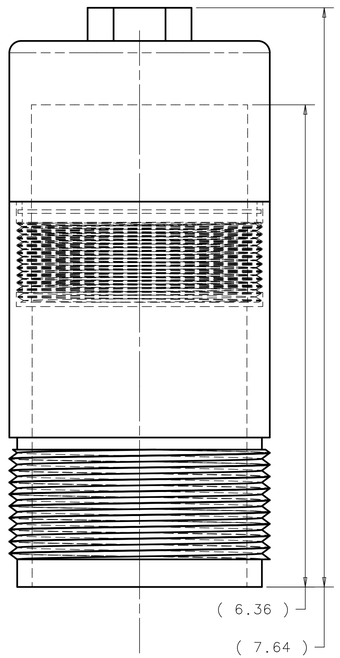

STEP 1

SEPARATE FILTER HOUSING PORTION OF PURCHASED WATER FILTER P/N UFS 337-SS.5.LE4 (THIS IS THE PART THAT WILL BE ALTERED)

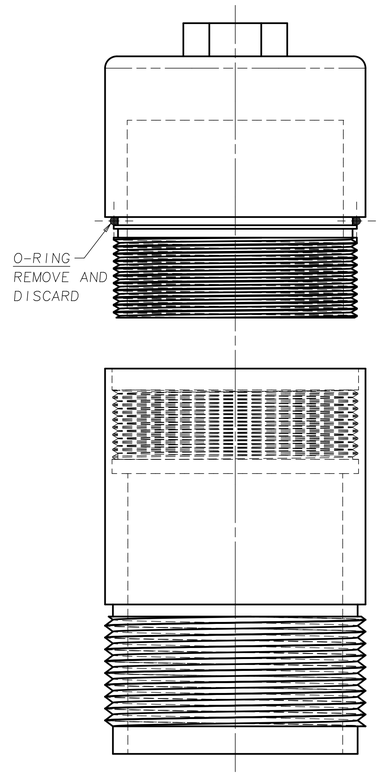

STEP 2

DISMANTLE FILTER HOUSING DISCARDING O-RING

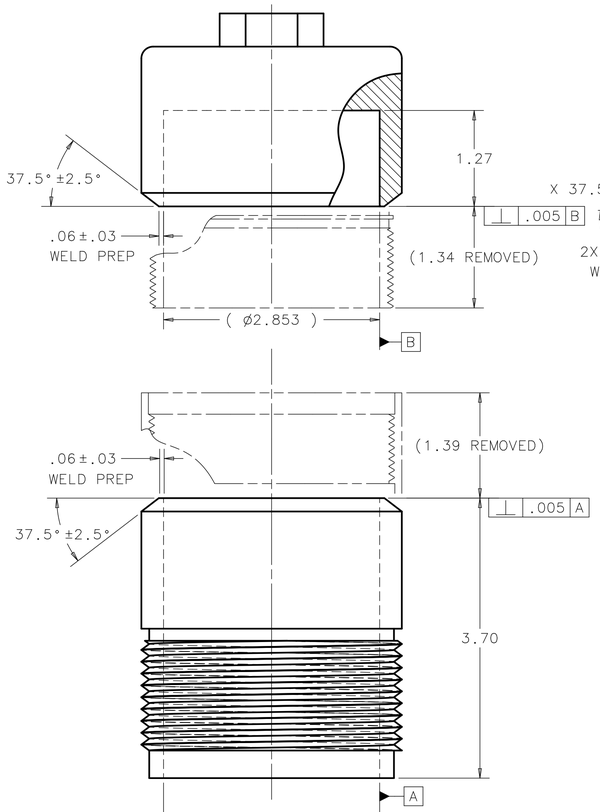

STEP 3

MACHINE FILTER HOUSING COMPONENTS AS SHOWN

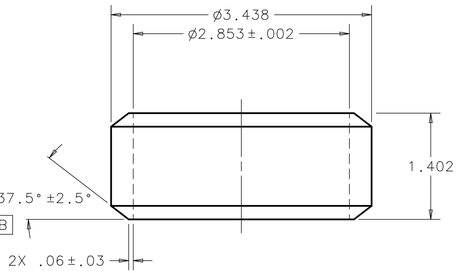

STEP 4

MANUFACTURE "NEW" COMPONENT AS SHOWN
DESCRIPTION: SLEEVE-SPACER
QUANTITY: 1
MATERIAL: 316L SST

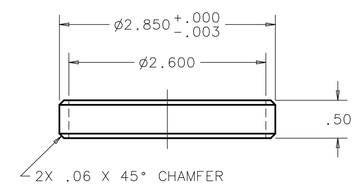

STEP 5

MANUFACTURE "NEW" COMPONENT AS SHOWN
DESCRIPTION: BACKING RING
QUANTITY: 2
MATERIAL: 316L SST

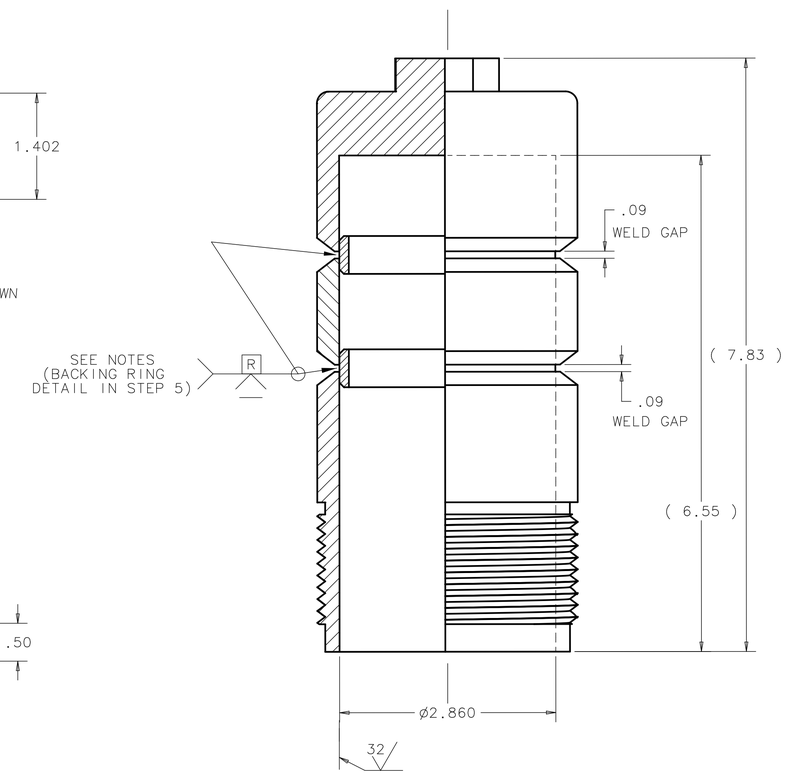

STEP 6

WELD AND POST-WELD MACHINE AS SHOWN

NOTES:
1) FABRICATE PER FERMILAB WELD PROCEDURE SPECIFICATION SS-3. 1500 PSI OPERATING PRESSURE, 100°F OPERATING TEMPERATURE.
2) ELECTROPOLISH BOWL TO 20μ-in. Ra INSIDE SURFACES.

NOTICE: IMAGE OBTAINED FROM FERMILAB WEB SITE

This information is provided for REFERENCE use only. Not for MANUFACTURE, or DESIGN INFORMATION. All information contained in this document represents work sponsored by an agency of the U.S. Government. Neither the U.S. Government nor any agency thereof, nor Universities Research Association, Inc., nor any of their employees or officers, makes any warranty, express or implied, or assumes any legal liability or responsibility for the accuracy, completeness, or usefulness of any information, apparatus, product or process disclosed, or represents that its use would not infringe privately owned rights.

UNLESS OTHERWISE SPECIFIED			ORIGINATOR	D.OLIS	01-JUL-2008
.XX	.XXX	ANGLES	DRAWN	F.MCCONOLOGUE	01-JUL-2008
± .01	± .005	± 1°	CHECKED	D.OLIS	17-JUL-2008
			APPROVED	D.OLIS	17-JUL-2008

1. BREAK ALL SHARP EDGES .02 MAX.
2. DO NOT SCALE DRAWING.
3. DIMENSIONS BASED UPON ASME Y14.5M-1994
4. MAX. ALL MACH. SURFACES 64
5. DRAWING UNITS: U.S. INCH

USED ON

MATERIAL: 316 L SST

FERMI NATIONAL ACCELERATOR LABORATORY
UNITED STATES DEPARTMENT OF ENERGY

SCRF - HIGH PRESSURE RINSE HPR STATION FILTER-HOUSING_ALTERATION

SCALE	DRAWING NUMBER	SHEET	REV
1:1	5525.000-MD-458929	1 OF 1	

CREATED WITH : Ideas12NXSeries | GROUP: TD/DDCIS-DESIGN-COMPUTING