REV	DESCRIPTION	DRAWN / APPROVED	DATE / DATE
	ER# 9851 NEW RELEASE		

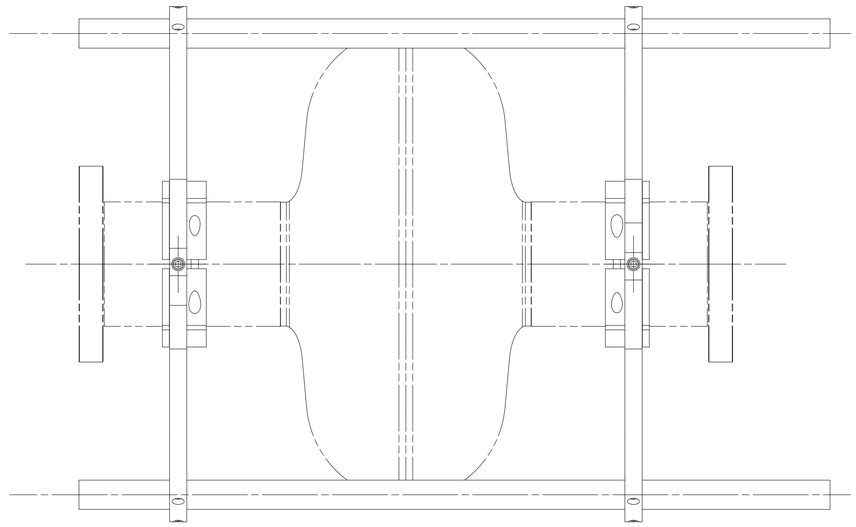

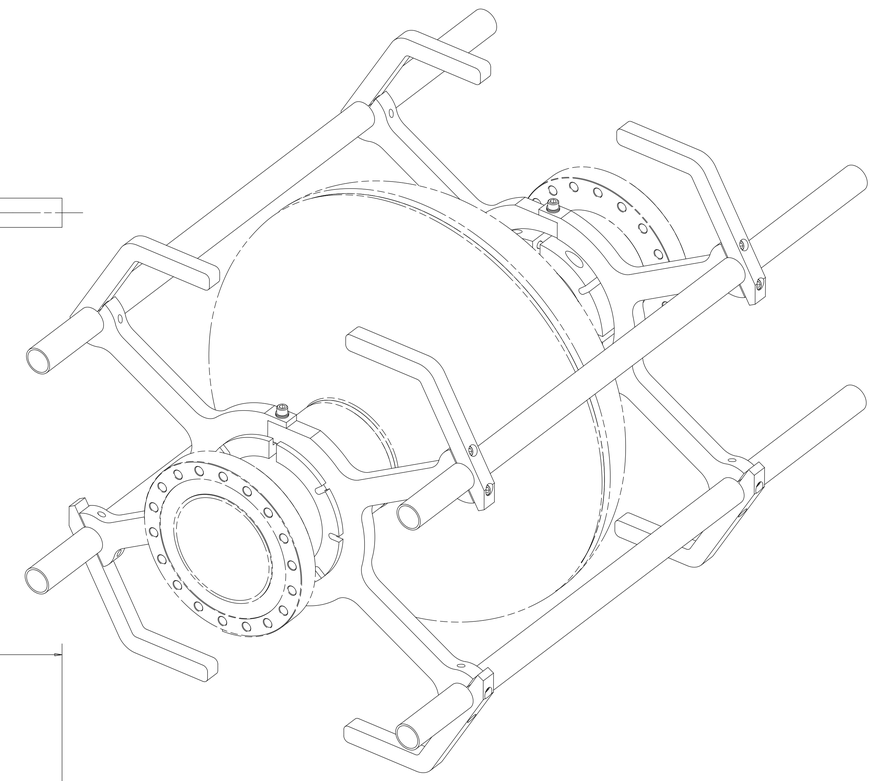

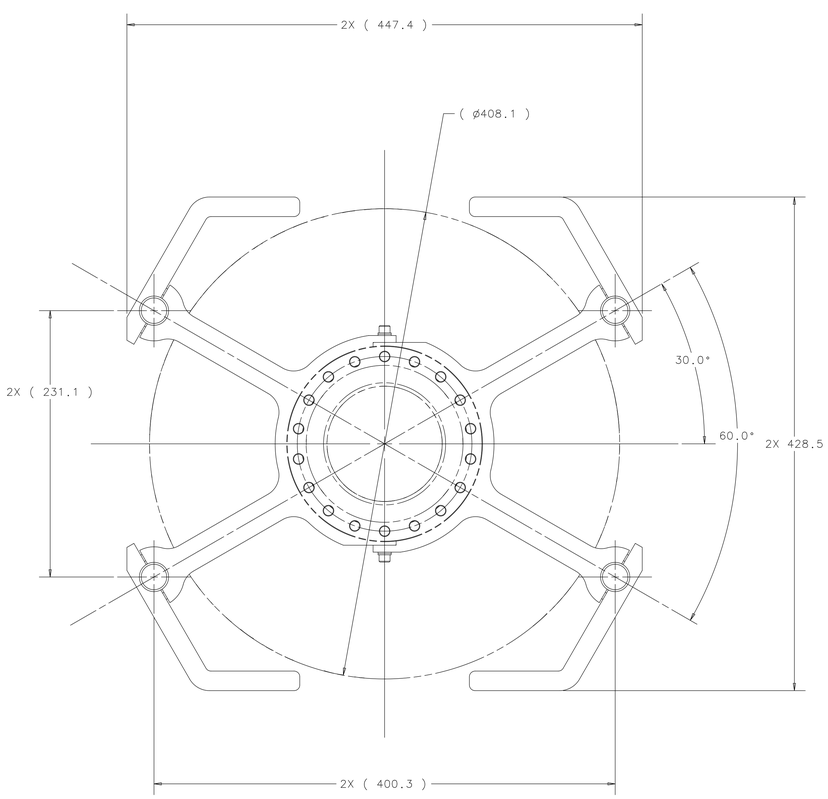

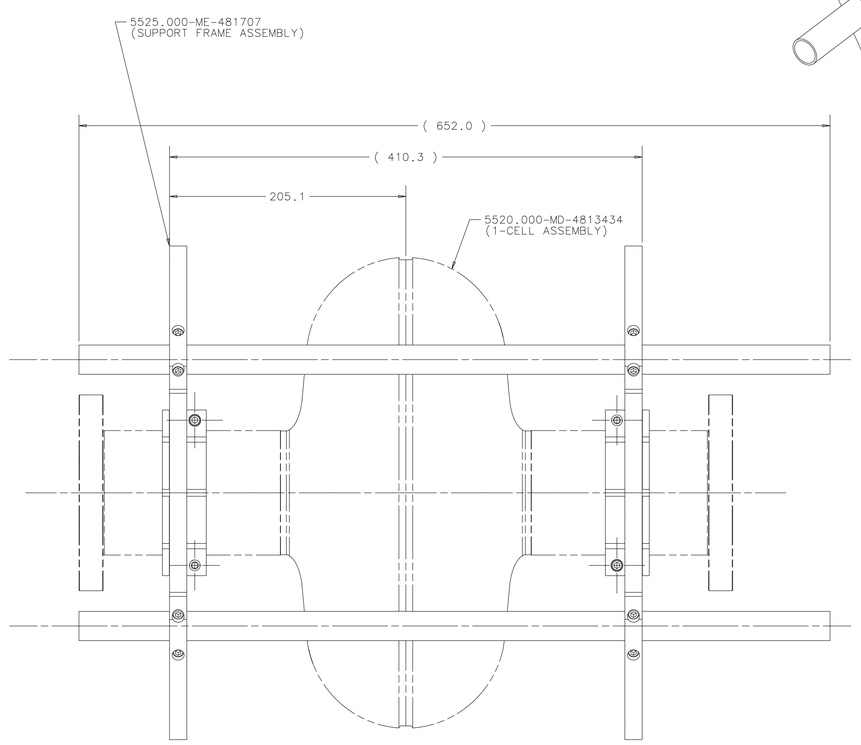

UNLESS OTHERWISE SPECIFIED			ORIGINATOR	O.PRONITCHEV	30-JUL-2010
0.X	0.XX	ANGLE	DRAWN	S.MEREDITH	30-JUL-2010
± 0.5	± 0.13	±0.5°	CHECKED	D.ARNOLD	26-AUG-2010
1. BREAK ALL SHARP EDGES 0.5 MAX.			APPROVED	O.PRONITCHEV	02-SEP-2010
2. DO NOT SCALE DRAWING.			USED ON		
3. DIMENSIONS BASED UPON ASME Y14.5M-1994					
4. MAX. ALL MACH. SURFACES 3.2			MATERIAL		
5. DRAWING UNITS: mm					

FERMI NATIONAL ACCELERATOR LABORATORY
UNITED STATES DEPARTMENT OF ENERGY

SRF - 650 MHZ TOOLING 1-CELL B9 SUPPORT FRAME DESIGN LAYOUT ASSEMBLY

SCALE	DRAWING NUMBER	SHEET	REV
1:2	5525.000-ME-481706	1 OF 1	

CREATED WITH : Ideas12NXSeries GROUP: TD/DDCIS-DESIGN-COMPUTING

NOTICE: IMAGE OBTAINED FROM FERMILAB WEB SITE
This information is provided for REFERENCE use only.
Not for MANUFACTURE, or DESIGN INFORMATION.
All information contained in this document represents work sponsored by an agency of the U.S. Government. Neither the U.S. Government nor any agency thereof, nor Universities Research Association, Inc., nor any of their employees or officers, makes any warranty, express or implied, or assumes any legal liability or responsibility for the accuracy, completeness, or usefulness of any information, apparatus, product or process disclosed, or represents that its use would not infringe privately owned rights.